技術指標參數 Technical data	產品型號：K35ASJ-6 (35mm 低腳旋轉式閥芯(中間))		
最高使用溫度 Max.temperature	90℃	迫緊上蓋鎖值 Tightening torque	10±1 N.m
開啟角度 Open angle	25°	旋轉角度 Rotary angle	90°

水壓流量表
Relation between
pressure and flow rate

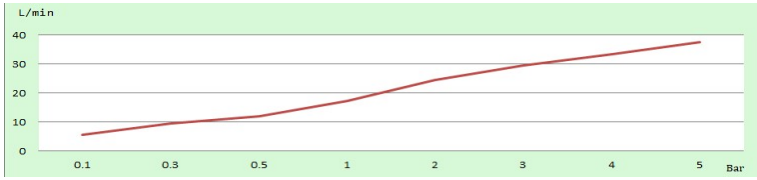

壓力 Pressure	0.1bar	0.3bar	0.5bar	1bar	2bar	3bar	4bar	5bar
流量平均值 L/min (無起泡頭) Average flow rate (Free flow)	5.5	9.5	12.0	17.1	24.5	29.6	33.4	37.6

測試項目 Performance test		
扭力測試 Torque test (N.m) (壽命測試前) (Before Life cycle test)	轉左-右 Turn left-right (N.m)	開-關 Open-close (N.m)
	---	0.05~0.55

密封測試 Sealing test	靜壓 Static pressure	氣壓 Air pressure	6±1 bar
		水壓 Water pressure	35 bar
	靜壓爆破 Burst test		60 bar

壽命測試 Life test	EN817-70,000 cycles / ASME-500,000 cycles

以上測試為 KCG 自製龍頭 . The testing faucet is designed by KCG.

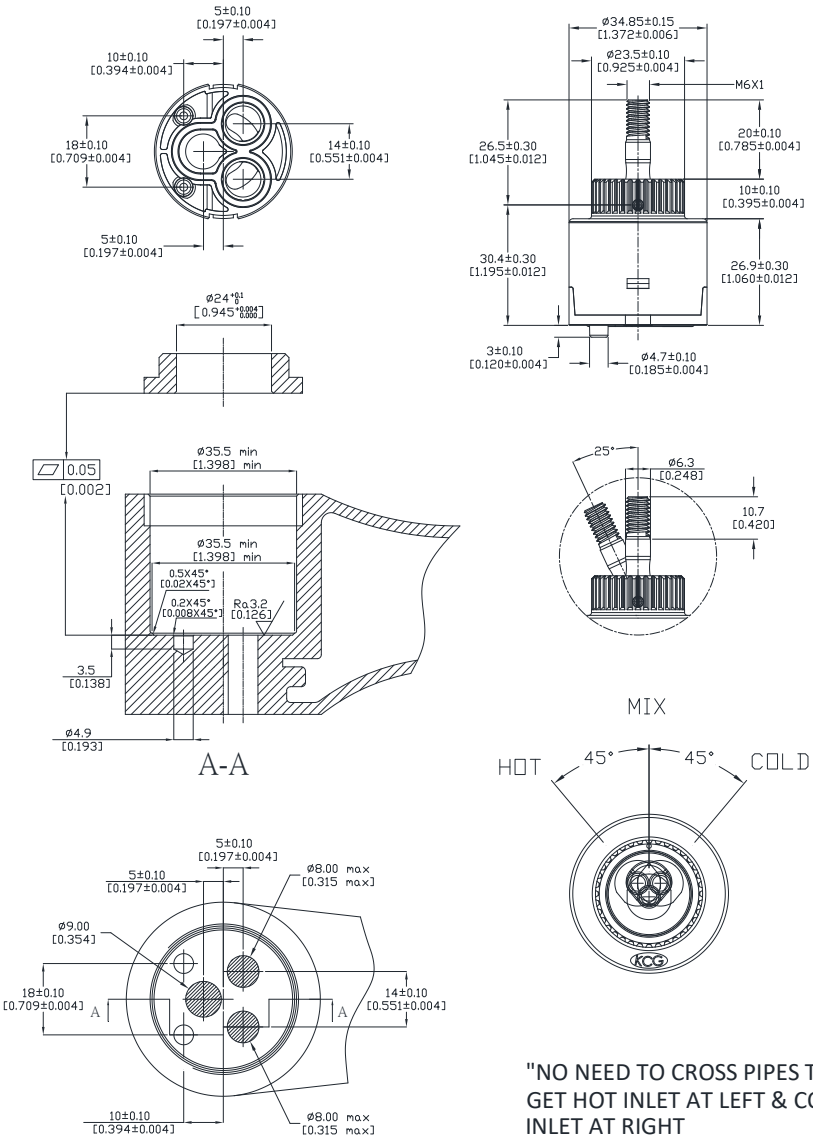

"NO NEED TO CROSS PIPES TO GET HOT INLET AT LEFT & COLE INLET AT RIGHT